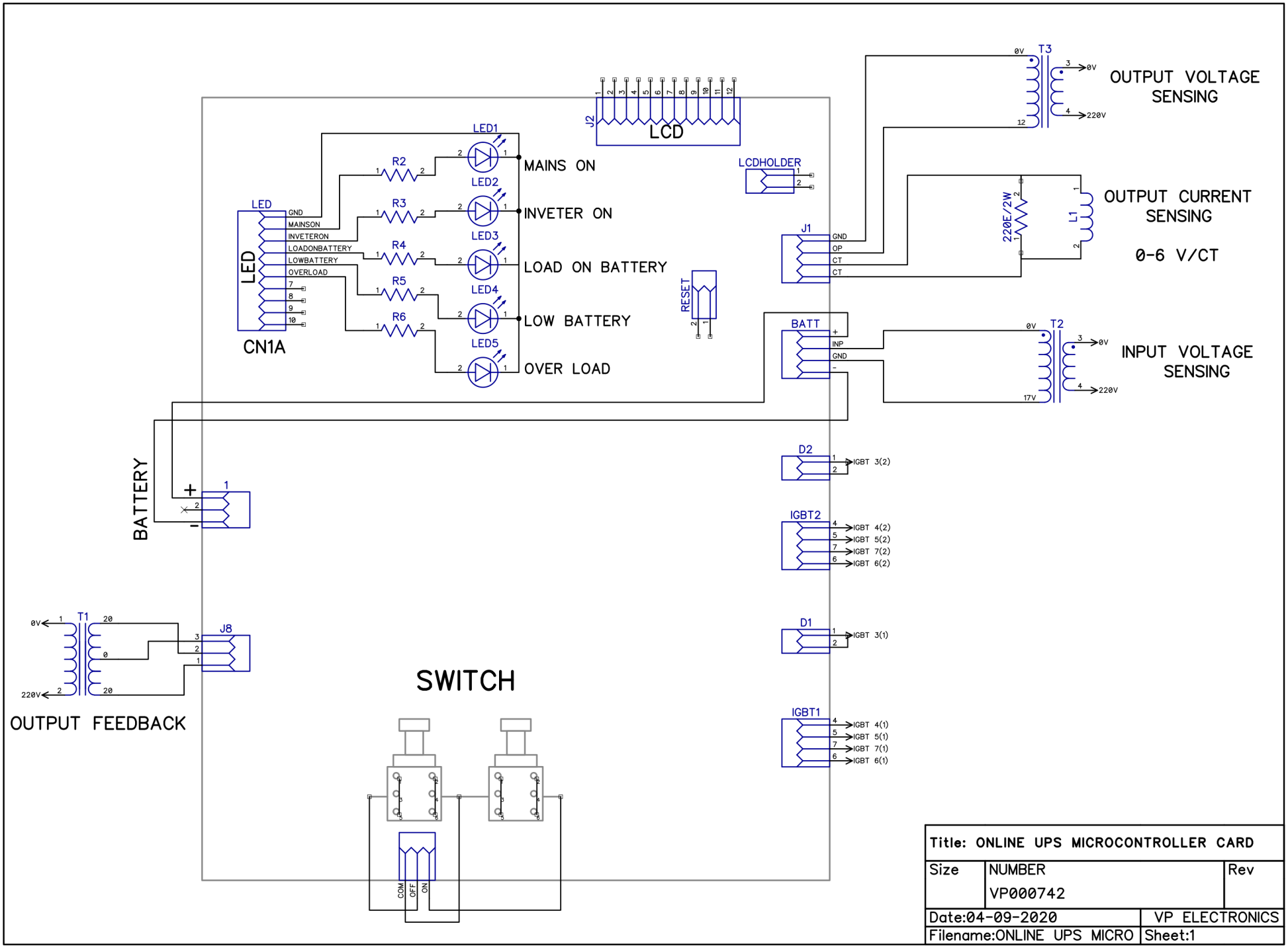
LCD
J2
LCDHOLDER
LED1
LED2
LED3
LED4
LED5
R2
R3
R4
R5
R6
MAINS ON
INVETER ON
LOAD ON BATTERY
LOW BATTERY
OVER LOAD
LED
GND
MAINSON
INVETERON
LOADONBATTERY
LOWBATTERY
OVERLOAD
CN1A
RESET
T3
OUTPUT VOLTAGE SENSING
220E/2W
L1
OUTPUT CURRENT SENSING
0-6 V/CT
J1
GND
OP
CT
CT
BATT
INP
GND
T2
INPUT VOLTAGE SENSING
BATTERY
D2
IGBT 3(2)
IGBT2
IGBT 4(2)
IGBT 5(2)
IGBT 7(2)
IGBT 6(2)
D1
IGBT 3(1)
IGBT1
IGBT 4(1)
IGBT 5(1)
IGBT 7(1)
IGBT 6(1)
T1
J8
OUTPUT FEEDBACK
SWITCH
COM
OFF
ON
Title: ONLINE UPS MICROCONTROLLER CARD
Size
NUMBER
VP000742
Rev
Date:04-09-2020
VP ELECTRONICS
Filename:ONLINE UPS MICRO
Sheet:1