光碁科技股份有限公司
CERAMATE TECHNICAL CO., LTD.

SPECIFICATIONS

PRODUCT： **VARISTOR**

TYPE： **NFV20D□□□K**

MODEL：

CITATION：

REVISION： **B01**

TOTAL PAGES： **5** PAGE：**1/5**

RELEASED DATE： **Oct. 15, 2001**

REVISION HISTORY

NO	REV. DATE	DCR NO.	DESCRIPTION OF CHANGE	REV.
1	Oct. 15, 2001		NEW RELEASE	**B01**
2				
3				
4				
5				
6				
7				
8				
9				
10				
11				
12				

Approved by	Checked by	Edited by
Yu-Chang Huang	Cloud Chen	Andy Chiang

1. QUALITY SYSTEM APPROVAL

ISO9001 Certificate of approval No.97-HOU-AQ-1382

2. SAFETY STANDARDS APPROVAL

Standard No.	UL 1414	UL 1449	UL 497B	CUL	CSA C22.2 No.1	VDE 42000
File No.	E181368	E166389	E187844	E166389	LR105317	5938
180K～680K			Approved			Approved
820K～181K		Approved	Approved	Approved		Approved
201K～471K	Approved	Approved	Approved	Approved	Approved	Approved
511K		Approved	Approved	Approved		Approved
561K～821K	Approved	Approved	Approved	Approved		Approved
911K～112K						Approved
182K						

3. STRUCTURE

NO.	ITEM	DESCRIPTION
3.1	Main Material	Zinc Oxide
3.2	Coating Material	Silicone or Phenolic resin
3.3	Marking	NFV, Part number, UL,CUL,CSA and VDE recognized component mark, Date code
3.4	Appearance	Without dirt and crack, marking should be clear
3.5	Dimensions	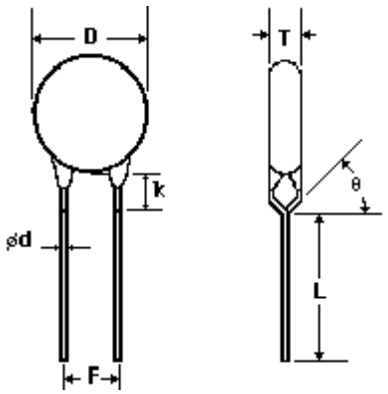 Unit: mm

D(max.)	23.0
k(max.)	5.0
T(max.)	∗(1)
F	10.0± 1.0
ϕ d	1.0± 0.1
θ (max.)	75°
L(min)	25.0

∗(1) See Page 3, Dimensions Table

Part No.	$T_{max.}$
20D180K	4.3
20D220K	4.5
20D270K	4.8
20D330K	4.1
20D390K	4.3
20D470K	4.5
20D560K	4.7
20D680K	4.5
20D820K	4.1
20D101K	4.3
20D121K	4.5
20D151K	4.8
20D181K	4.2
20D201K	4.3
20D221K	4.4
20D241K	4.5
20D271K	4.6
20D301K	4.8
20D331K	4.9
20D361K	5.1
20D391K	5.2
20D431K	5.4
20D471K	5.6
20D511K	5.7
20D561K	5.8
20D621K	6.1
20D681K	6.4
20D751K	6.7
20D781K	6.8
20D821K	7.0
20D911K	7.1
20D102K	7.3
20D112K	7.7
20D182K	11.7

Unit:mm

4. ELECTRICAL CHARACTERISTICS

N0.	ITEM	PERFORMANCE	TEST METHODS
4.0	Standard Conditions		Unless otherwise specified, all tests are made under environmental conditions as given below: Temperature: 5～35℃ Relative humidity: 45～85 % RH
4.1	Maximum Allowable Voltage	AC : ＊**(2)** Vrms DC : ＊**(2)** V	Maximum continuous sine wave(RMS) or DC voltage which may be applied.
4.2	Varistor Voltage	V_{1mA} : ＊**(2)** V	Voltage across the varistor measured at C_{mA} DC.
4.3	Varistor Voltage Temperature Coefficient	0 ～ −0.05 %/℃	$\frac{V_{CmA}\text{ at }85℃ - V_{CmA}\text{ at }25℃}{V_{CmA}\text{ at }25℃} \times \frac{1}{60} \times 100$
4.4	Max. Clamping Voltage	＊**(2)** V at ＊**(2)** A	Peak voltage across the varistor with a specified peak impulse current of 8× 20 μs waveform.
4.5	Rated Power	＊**(2)** W	Maximum 50～60Hz power which may be loaded for 1,000 hrs at 85± 2℃ with $\triangle V_{CmA}/ V_{CmA} \leqq \pm$ 10%.
4.6	Withstanding Surge Current	＊**(2)** A	The max. current within the varistor voltage change of less than ± 10% when one impulse current (8× 20 μs) applied. The max. current with a varistor voltage change of less than ± 10% when two times impulse current (8× 20 μs) are applied at intervals of 5 minutes.
4.7	Energy	＊**(2)** Joule	The max. energy absorbed with a varistor voltage change of less than ± 10% when one impulse(10 × 1000 μs) is applied.
4.8	Surge Life	＊**(2)** A	The max. current with a varistor voltage change of less than ± 10% when 10,000 times impulse current (8× 20 μs) are applied at intervals of 20 seconds at room temperature.

＊(2) See Page 5

PART NUMBER	MAXIMUM ALLOWABLE VOLTAGE		VARISTOR VOLTAGE	CLAMPING VOLTAGE (MAX.)		RATED WATTAGE (MAX.)	SURGE CURRENT (8/20 μs)		MAXIMUM ENERGY (10/1000 μs)	SURGE LIFE
	AC_{rms}(V)	DC(V)	(V)	(V)	Ip(A)	(W)	I_{tm}(A) 1 TIME	I_{tm}(A) 2 TIMES	W_{tm}(joule)	(A)
20D180K	11	14	16～20	36	20	0.2	3000	2000	13.0	130
20D220K	14	18	20～24	43					16.0	
20D270K	17	22	24～30	53					19.0	
20D330K	20	26	30～36	65					24.0	
20D390K	25	31	35～43	77					28.0	
20D470K	30	38	42～52	93					34.0	
20D560K	35	45	50～62	110					41.0	
20D680K	40	56	61～75	135					49.0	
20D820K	50	65	74～90	135	100	1.0	10000	6500	56.0	250
20D101K	60	85	90～110	165					70.0	
20D121K	75	100	108～132	200					85.0	
20D151K	95	125	135～165	250					106.0	
20D181K	115	150	162～198	300					130.0	
20D201K	130	170	185～225	340					140.0	
20D221K	140	180	198～242	360					155.0	
20D241K	150	200	216～264	395					168.0	
20D271K	175	225	247～303	455					190.0	
20D301K	190	250	270～330	505					210.0	
20D331K	210	275	297～363	545					228.0	
20D361K	230	300	324～396	595					255.0	
20D391K	250	320	351～429	650					275.0	
20D431K	275	350	387～473	710					303.0	
20D471K	300	385	423～517	775					350.0	
20D511K	320	410	459～561	845					382.0	
20D561K	350	460	504～616	920			7500		382.0	
20D621K	385	505	558～682	1025					382.0	
20D681K	420	560	612～748	1120					382.0	
20D751K	460	615	675～825	1240					420.0	
20D781K	485	640	702～858	1290					440.0	
20D821K	510	670	738～902	1355					460.0	
20D911K	550	745	819～1001	1500					510.0	
20D102K	625	825	900～1100	1650					565.0	
20D112K	680	895	990～1210	1815					620.0	
20D182K	1000	1465	1700～1980	2970					1020.0	200