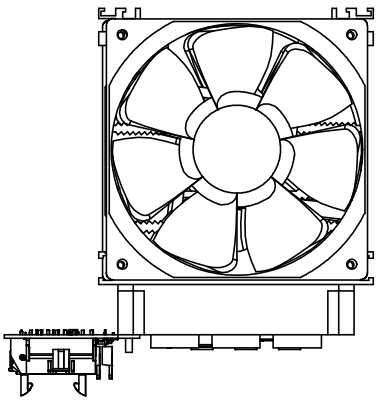

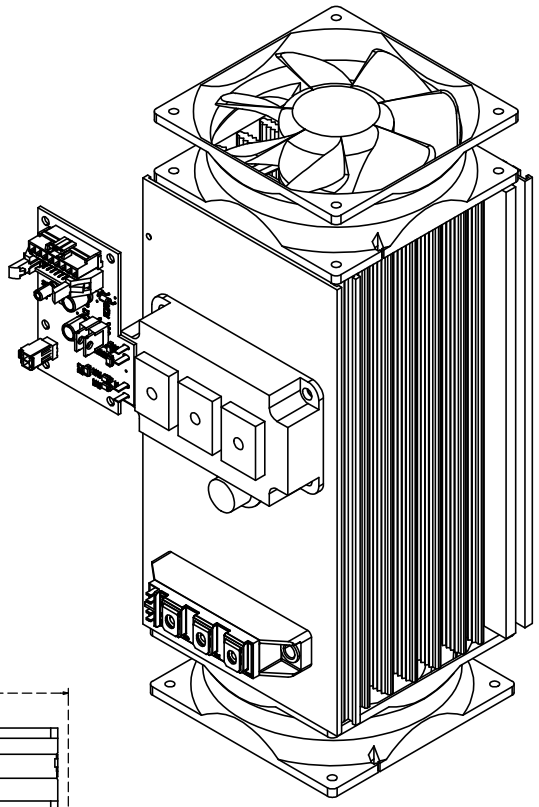

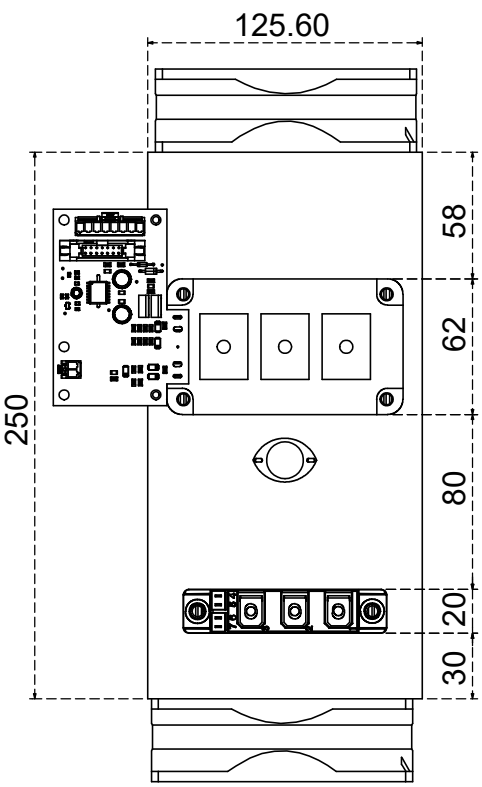

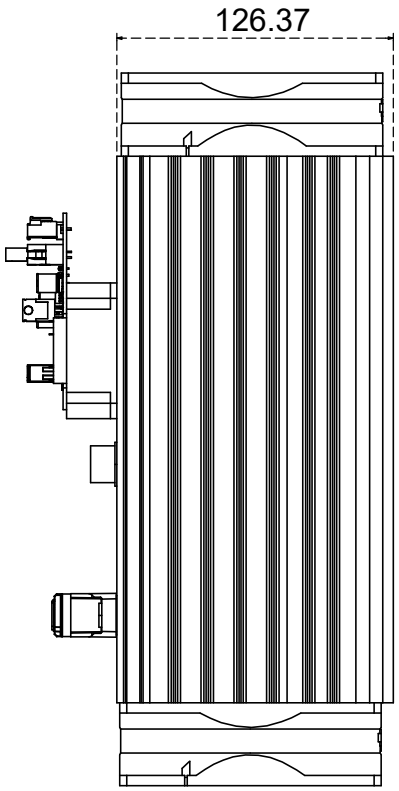

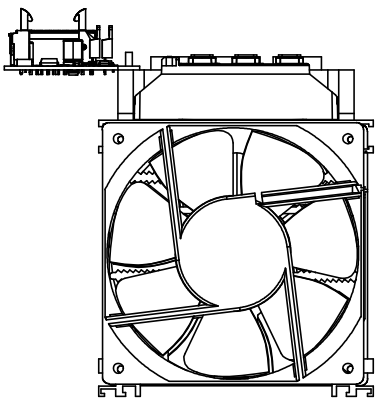

ASSEMBLY HEAT SINK 126X250MM, 18 HOLES
(REFERENCE ONLY)

SCAN

ERP ITEM: HEAT SINK 126X250MM, 18 HOLES
USED IN 100KVA, 3 PHASE HYBRID PCU

W.O. NO.		DRAWN	RAVI	MATERIAL	
MODEL NO.		CHKD.		SHEET THICKNESS	
REV.	0	APPD.		QTY.	
PART NO.	HS-126X250MM-H18	DATE	21.07.25	Sheet No.	01 / 01

Note: All dimensions are in mm